SINGLE-PORTED GLOBE CONTROL VALVES **TYPE Z1A®**

APPLICATION AREA:

Single-ported globe control valves type Z1A are used in automatic and remote control instalations as flow control Elements to adjust flow of liquids, steam and gases. Wide range of material and design versions makes the Valves applicable in most demanding working conditions in power generation, petroleum chemistry, heating, Chemical industry, metallurgy, etc. versions designated for Western Europe market can be marked BR12.

FEATURES:

- various materials of valve body and internal parts, adapted to specific working conditions,
- design provides noise reduction, enhanced resistance to cavitation and flashing, and elimination of choked flow,
- wide range of nominal pressures, PN10 to CL2500, and flow ratio and control characteristics,
- reduction in aggressive and toxic media emissions to environment through application of bellow seal bonnets or bonnet packings meeting requirements of TA-LUFT,
- easy assembly and dismantling of valve internal parts for maintenance and service,
- high durability and reliability due to application of top-class materials and surface improvement processes (burnishing, stelliting, heat treatment treatment, CrN coating),
- Possibility of mating with reverse action P/R (column) and P1/R1 (cast yoke) multi-spring actuators, and changing the spring range with no extra parts (keeping the number of springs),
- Possibility of fitting actuators with side-mounted (P1/R1) or top-mounted (P/R) handwheel,
- possibility of performing diagnostics of “valve - actuator” due to application of smart electro-pneumatic positioners,
- wide range of electric actuators,
- special designs for oxygen, hydrogen, gas fuels, low temperature fluids (liquid oxygen, liquid nitrogen), acid gasescontaining H2S with heat jacket; for potentially explosive atmospheres as per ATEX Directive 2014/34/EU,
- design and production process meet the requirements of Quality Management System ISO 9001 and Directive 2014/34/EU, and regulations of AD2000 Merkblatt, designated for installation on pipelines.

DESIGN AND TECHNICAL SPECIFICATION:

***Body** (1)*: Single-ported, cast

Nominal size: DN15; 20; 25; 40; 50; 80; 100; 150; 200; 250; 300

Nominal pressure:

- PN10; 16; 25; 40; 63; 100;160; 250; 320; 400 (as per PN-EN1092-1:2010)
- PN-H-74306:1985; PN-H-74307:1985.
- CL150; CL300; CL600; CL900; CL1500; CL2500 (as per PN-EN 1759-1:2005).

divided as follows: DN15...300: PN10...100; CL150…CL600 *
DN15...150: CL900; PN160 *
DN15...100: PN250…400; CL1500…CL2500 *

*)higher nominal pressures available after agreement with the manufacturer

Connections:
- flanged: as per Table 1
- butt welding ends BW, as per Table 19 and 18
- socket welding ends SW, as per table 21

Steel flanges CL150; CL300; CL600; CL900; CL1500; CL2500 are so designed that they canbe assembled with flanges as per American standards ANSI/ASME B16.5 and MSS SP44. In American standards flanges are identified with nominal Values in "Classes", to which nominal pressure (PN) values as per PN-ISO7005-1:2002 correspond.

Equivalent identification as per PN are: CL150: PN 20 CL300: PN 50
CL600: PN 110 CL900: PN 150
CL1500: PN 260 CL2500: PN 420

Table 1. Flanged end connections

Nominal pressure	Facing of flange types			
	Raised face	Groove	Recess	Ring - joint
	Identification			
PN10; 16; 25; 40; 63; 100; 160; 250; 320; 400	B [3)]	D [1)]	F [1)]	-
CL150; 300	B [3)]	DL (D1 [2)])	F (F1 [1)])	J (RTJ)
CL600; 900; 1500; 2500	B [3)] (RF)	DL (GF)	F (FF)	J (RTJ)
[1)] - do PN160; [2)] - tylko dla CL300; [3)] - B1 – (Ra=12.5 µm, concentric surface structure "C"), B2 – (Ra as agreed with the customer); () - identification of connections as per ASME B16.5				
Possible execution of flanges per specification and indicated standards				

Face-to-face dimensions:
- flanged valves as per PN-EN 60534-3-1; PN-M-74005; ISA S75.16-1993; Fig. 5; Table 16; 17
- welding ends valves; Fig. 5; Table 18
- as per PN-EN 60534-3-3: for PN 10...100 and CL150…600
- as for flanged valves PN 160: for PN 160 and CL900
- as for flanged valves PN 400: for PN 250...400 and CL1500…2500

Materials:
- as per Table 2;

Ratio between working pressure and temperature as per Table 3…9.

Bonnet (2):
- standard
- extension
- bellows seal (PN10…40; CL150…300)

Valve plug (3):
- piston, sleeve guided, hard. Rangeability: 50:1
- variants: contoured,
  piston - perforated,(multi-hole)
- flow characteristics: equal percentage - P
  linear - L
  quick opening - S (only for contoured valve plugs)

Valve seat (4): - fitted-in and sealed with body, hard (tight seat after consulting the manufacturer)

Valve plug stem (5): - burnished, polished sealing face.

Pressing cage (6A): - valve seat to body fixture.

Choke cage (6B): - Perforated valve seat fixture, causing reduction in pressure drop between seat and plug.

Body gasket (7) and seat gasket (8): spiral, graphite+1.4404 in all executions.

Stem packing (9):
- PTFE-V packing, compressed with spring bolt (18),
- ring gaskets formed in braided packing cords (PTFE +GRAPHITE),
- graphite kits (expanded & silky graphite) or gaskets formed in braided graphite cords,
- TA-LUFT sealing with PTFE-V packing kit or graphite kit; packing structure as per Figs. 1 and 2, range of applications as per table 10.

Leakage class: (as per PN-EN 60534-4)
- basic: (class IV) Less than 0,01% Kvs
- enhanced: (class V) $3 \cdot 10^{-4} D \cdot \Delta p$ [cm³/min]

where D (mm) – is seat diameter as per table 10

ΔP [bar] - actual pressure drop in closed valve.

Fluid flow direction: to valve plug.

Flow coefficients: as per table 11

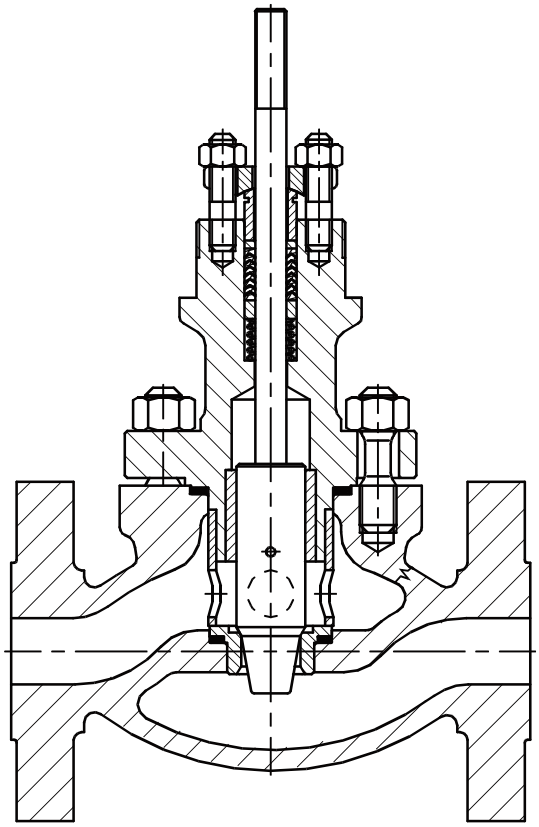

Fig. 1a. Valve Z1A – contoured valve plug and compression cage

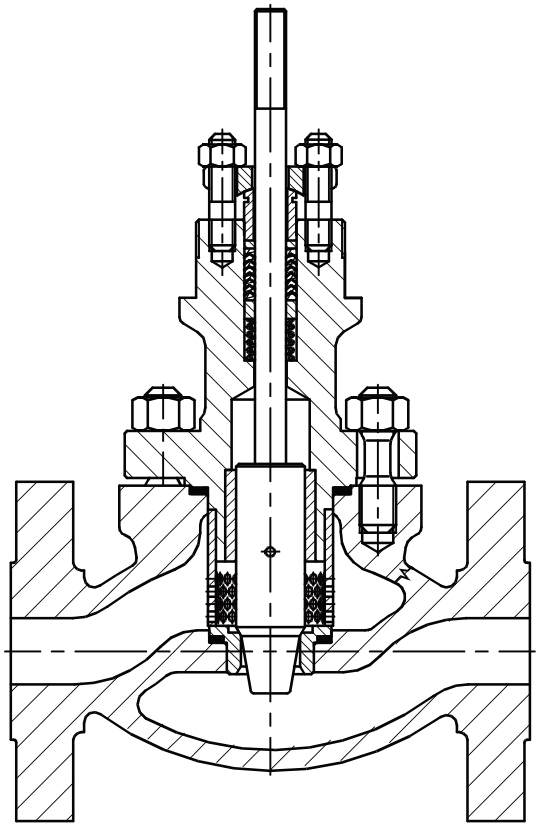

Fig. 1b. Valve Z1A – contoured valve plug and choke cage

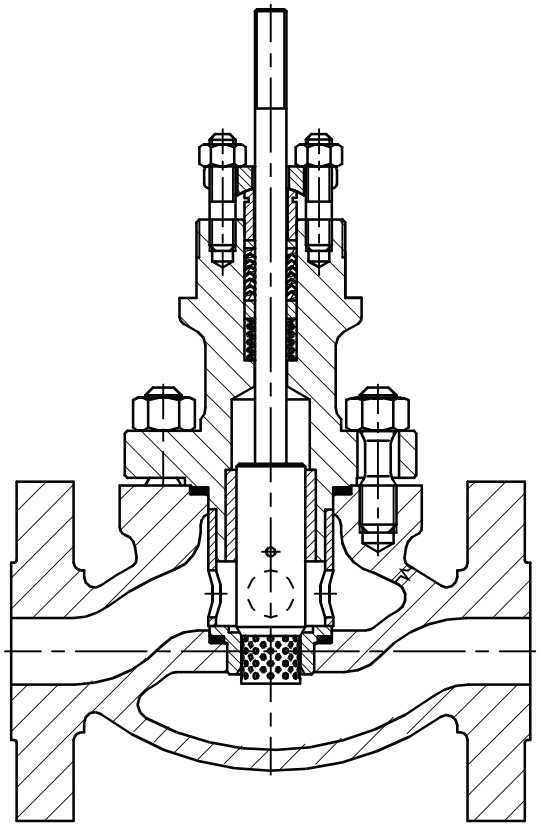

Fig. 1c. Valve Z1A – perforated valve plug and compression cage.

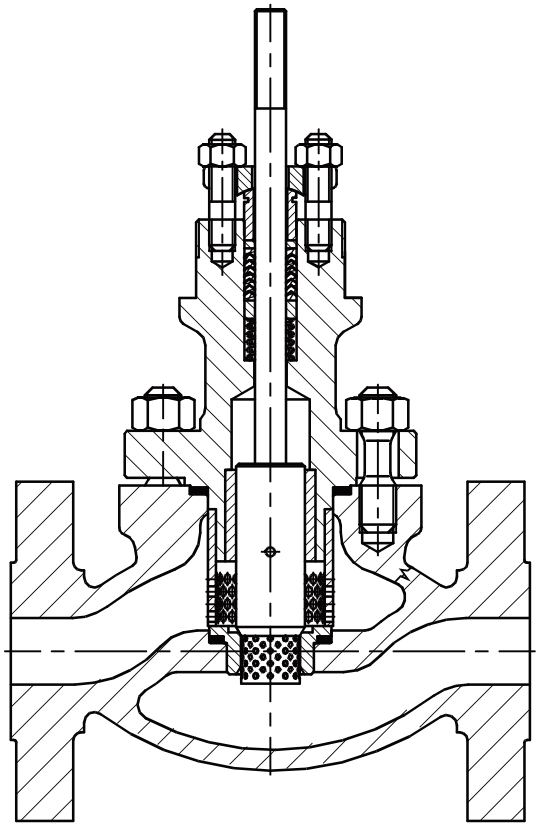

Fig. 1d. Valve Z1A – perforated valve plug and choke cage

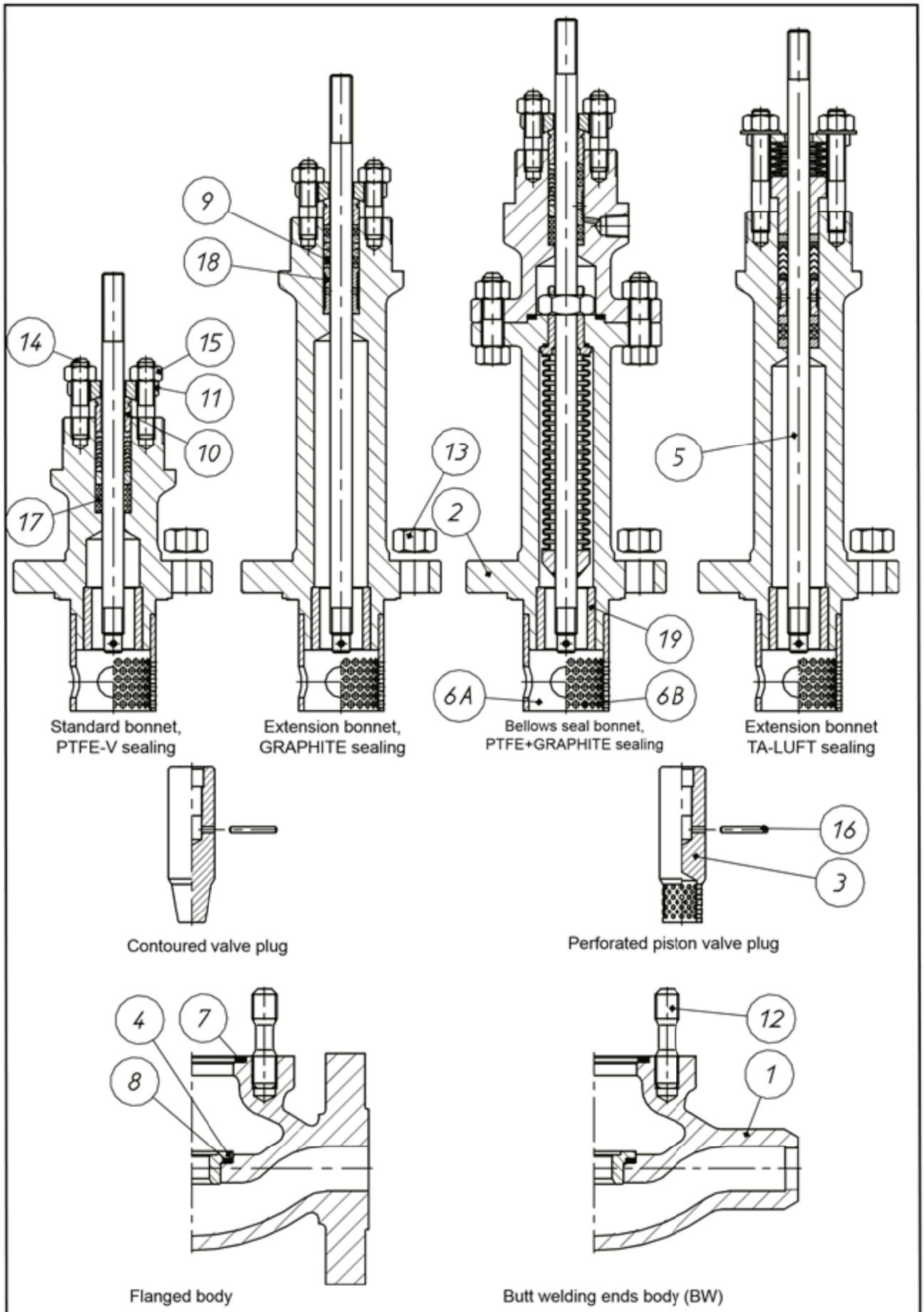

Fig. 1e. Control valve

Table 2. Part list with materials

Item	Part		Materials		
1	Body		GP 240 GH ; (1.0619) WCB	G17CrMo 9-10 ; (1.7379) WC9	GX5CrNiMo 19-11-2 ; (1.4408) CF8M
2	Bonnet	DN15…50	S 355 J2G3 (1.0570)	13CrMo4-4 ; (1.7335)	X6CrNiMoTi 17-12-2 ; (1.4571)
		DN80…300	GP 240 GH ; (1.0619) WCB	G17CrMo 9-10 ; (1.7379) WC9	
3	Plug		X6CrNiMoTi 17-12-2; (1.4571) X6CrNiMoTi 17-12-2; (1.4571) + stellite + CrN X17CrNi 16-2 ; (1.4057) + heat treatment		
4	Seat		X6CrNiMoTi 17-12-2; (1.4571) X6CrNiMoTi 17-12-2; (1.4571) + stellite X17CrNi 16-2; (1.4057) + heat treatment		
5	Stern		X6CrNiMoTi 17-12-2; (1.4571) X6CrNiMoTi 17-12-2; (1.4571) + stellite + CrN X17CrNi 16-2 ; (1.4057) + heat treatment		
6A	Compression cage		X6CrNiMoTi 17-12-2; (1.4571) X17CrNi 16-2; (1.4057) + heat treatment		
6B	Choke cage				
7	Body gasket		GRAPHITE (98%) + 1.4404 (spiral)		
8	Seat gasket				
9	Packing kit		PTFE + GRAPHITE		
			PTFE „V" (Rings)		
			GRAPHITE		
10	Press sleeve		X6CrNiMoTi 17-12-2; (1.4571)		
11	Press lever		S 355 J2G3 ; (1.0570)		
12	Body screw	PN10…CL300	8.8	A4 - 70 *)	
		PN63…CL2500	42CrMo4 (1.7225)	21CrMoV5-7 (1.7709)	X6NiCrTiMoVB 25-15-2 (1.4980)
13	Body nut	PN10…CL300	8.8	A4 - 70 *)	
		PN63…CL2500	42CrMo4 (1.7225)	21CrMoV5-7 (1.7709)	X6NiCrTiMoVB 25-15-2 (1.4980)
14	Bonnet screw		8.8	A4 - 70 *)	
15	Bonnet nut		8.8	A4 - 70 *)	
16	Notched peg		X6CrNiMoTi 17-12-2; (1.4571)		
17	Spring		12R10 (SANDVIK)		
18	Spacer sleeve		X6CrNiMoTi 17-12-2; (1.4571)		
19	Guide sleeve		X6CrNiMoTi 17-12-2; (1.4571) + stellite + CrN X17CrNi 16-2 ; (1.4057) + heat treatment		

Relevant material standards	
Material	Standard
GP 240 GH ; (1.0619)	PN-EN 10213-2
WCB	ASTM A 216
G17CrMo 9-10 ; (1.7379)	PN-EN 10213-2
WC9	ASTM A 217
GX5CrNiMo 19-11-2 ; (1.4408)	PN-EN 10213-4
CF8M	ASTM A 351
S 355 J2G3 ; (1.0570)	PN-EN 10025
13CrMo4-4; (1.7335)	PN-EN 10028
X6CrNiMoTi 17-12-2 ; (1.4571)	PN-EN 10088
X17CrNi 16-2 ; (1.4057)	PN-EN 10088
C45 (1.0503)	PN-EN 10083-1
X30Cr13 (1.4028)	PN-EN 10088
8.8	EN 20898-1
A4-70 *)	EN ISO 3506-2
42CrMo4 (1.7225)	EN 10269
21CrMoV5-7 (1.7709)	EN 10269
X6NiCrTiMoVB 25-15-2 (1.4980)	EN 10269

NOTE:

*) - to be applied for nominal pressures PN10…CL600.

Hardening of valve internal surfaces comprises:

a) stelliting – padding of surfaces with stellite: ~ 40HRC

b) CrN coating – introducing chromium nitride to external layer of detail, to the depth of ca. 0,1mm; ~950HV

c) heat treatment: valve plug (~45HRC), valve seat (~35HRC), guide sleeve (~45HRC)

Table 3…9. Allowable working overpressure for materials at proper temperatures.

Table 3.	Material: GP240GH (1.0619) as per PN-EN 10213-2								
PN / CL	Standard	Temperature [°C]							
		-10…50	100	150	200	250	300	350	400
		Allowable working pressure [bar]							
PN10	EN 1092-1	10	9,2	8,8	8,3	7,6	6,9	6,4	5,9
PN16		16	14,8	14	13,3	12,1	11	10,2	9,5
CL150	PN-EN 1759-1	17,3	15,4	14,6	13,8	12,1	10,2	8,4	6,5
PN25	EN 1092-1	25	23,2	22	20,8	19	17,2	16	14,8
PN40		40	37,1	35,2	33,3	30,4	27,6	25,7	23,8
CL300	PN-EN 1759-1	45,3	40,1	38,1	36	32,9	29,8	27,8	25,7
PN63	EN 1092-1	63	58,5	55,5	52,5	48	43,5	40,5	37,5
PN100		100	92,8	88	83,3	76,1	69	64,2	59,5
CL600	PN-EN 1759-1	90,5	80,2	76,1	72	65,8	59,7	55,5	51,4
CL900		136	120	114	108	98,7	89,5	83,3	77,1
PN160		160	148,5	140,9	133,3	121,9	110,4	102,8	95,2
PN250		250	232,1	220,2	208,3	190,4	172,6	160,7	148,8
CL1500		226	201	190	180	165	149	139	129
PN320		320	297,1	281,9	266,6	243,8	220,9	205,7	190,4
PN400		400	371,4	352,3	333,3	304,7	276,1	257,1	238
CL2500		377	334	317	300	274	249	231	214

NOTES:

1. It is allowed to apply carbon steel and acid proof cast steel for temperatures lower than given in Tables 3...9, provided that working pressure is reduced respectively, working temperature impact tests are performed and cast is heat treated. Details have to be consulted with manufacturer.
2. Working pressure for intermediate temperature values can be calculated by interpolation.
3. Temperature range for flanged connections: up to +537°C, for welding connections: up to +650°C

Table 4.	Material: G17CrMo 9-10 (1.7379) as per PN-EN 10213-2																	
PN / CL	Standard	Temperature [°C]																
		-10…50	100	150	200	250	300	350	400	425	450	475	500	510	520	530	540	550
		Allowable working pressure [bar]																
PN10	-	10	10	10	10	10	10	9,7	9,2	9	8,8	7,6	6,4	5,6	4,9	4,2	3,7	3,2
PN16		16	16	16	16	16	16	15,6	14,8	14,4	14	12,1	10,2	8,9	7,8	6,8	5,9	5,1
CL150	PN-EN 1759-1	19,5	17,7	15,8	14	12,1	10,2	8,4	6,5	5,6	4,7	3,7	2,8	2,4	2	1,7	1,4	-
PN25	EN 1092-1	25	25	25	25	25	25	24,4	23,2	22,6	22	19	16	14	12,2	10,7	9,2	8
PN40		40	40	40	40	40	40	39	37,1	36,1	35,2	30,4	25,7	22,4	19,6	17,1	14,8	12,9
CL300	PN-EN 1759-1	51,7	51,5	50,2	48,3	46,3	42,8	40,2	36,6	35,1	33,8	31,7	28,2	26,6	23,5	20,6	17,8	15,5
PN63	EN 1092-1	63	63	63	63	63	63	61,5	58,5	57	55,5	48	40,5	35,4	30,9	27	23,4	20,4
PN100		100	100	100	100	100	100	97,6	92,8	90,4	88	76,1	64,2	56,1	49	42,8	37,1	32,3
CL600	PN-EN 1759-1	103	103	100	96,7	92,6	85,7	80,4	73,1	70,2	67,6	63,3	56,4	53,3	47,1	41,1	35,7	31,1
CL900		155	155	151	145	139	129	121	110	105	101	95	84,6	79,9	70,6	61,7	53,5	46,6
PN160		160	160	160	160	160	160	156,1	148,5	144,7	140,9	121,8	102,8	88,9	78,4	68,5	59,4	51,8
PN250		250	250	250	250	250	250	244	232,1	226,1	220,2	190,4	160,7	140,4	122,6	107,1	92,8	80,9
CL1500		259	258	251	242	232	214	201	183	175	169	158	141	133	118	103	89,1	77,7
PN320		320	320	320	320	320	320	312,3	297,1	289,5	281,9	243,7	205,7	179,8	156,9	137,1	118,8	103,6
PN400		400	400	400	400	400	400	390,4	371,4	361,8	352,3	304,7	257,1	224,7	196,1	171,4	148,5	129,5
CL2500		431	429	418	403	386	357	335	305	292	282	264	235	222	196	171	149	130

Table 5.	Material: GX5CrNiMo 19-11-2 (1.4408) as per PN-EN 10213-4																		
PN / CL	Standard	Temperature [°C]																	
		-10…50	100	150	200	250	300	350	400	425	450	475	500	510	520	530	540	550	600
		Allowable working pressure [bar]																	
PN10	EN 1092-1	10	10	9	8,4	7,9	7,4	7,1	6,8	-	6,7	-	6,6	-	-	-	-	6,5	5,6
PN16		16	16	14,5	13,4	12,7	11,8	11,4	10,9	-	10,7	-	10,5	-	-	-	-	10,4	8,9
CL150	PN-EN 1759-1	17,9	16,3	14,9	13,5	12,1	10,2	8,4	6,5	5,6	4,7	3,7	2,8	2,4	2	1,7	1,4	-	-
PN25	EN 1092-1	25	25	22,7	21	19,8	18,5	17,8	17,1	-	16,8	-	16,5	-	-	-	-	16,3	14
PN40		40	40	36,3	33,7	31,8	29,7	28,5	27,4	-	26,9	-	26,4	-	-	-	-	26	22,4
CL300	PN-EN 1759-1	46,7	42,5	38,9	35,3	32,9	30,5	28,8	27,6	27,2	26,9	26,6	26,4	26,3	22,5	22,4	22,3	22,2	-
PN63	EN 1092-1	63	63	57,3	53,1	50,1	46,8	45	43,2	-	42,4	-	41,7	-	-	-	-	41,1	35,4
PN100		100	100	90,9	84,2	79,5	74,2	71,4	68,5	-	67,3	-	66,1	-	-	-	-	65,2	56,1
CL600	PN-EN 1759-1	93,4	85	77,8	70,6	65,8	61	57,6	55,2	54,5	53,8	53,3	52,8	52,6	44,9	44,8	44,6	44,4	-
CL900		140	127	117	106	98,6	91,4	86,4	82,8	81,7	80,6	79,9	79,2	78,9	67,4	67,1	66,9	66,7	-
PN160		160	160	145,5	134,8	127,2	118,8	114,2	109,7	-	107,8	-	105,9	-	-	-	-	104,3	89,9
PN250		250	250	227,3	210,7	198,8	185,7	178,5	171,4	-	168,4	-	165,4	-	-	-	-	163	140,4
CL1500		233	212	194	176	164	152	144	138	136	134	133	132	132	112	112	111	111	-
PN320		320	320	291	269,7	254,4	237,7	228,5	219,4	-	215,6	-	211,8	-	-	-	-	208,7	179,8
PN400		400	400	363,8	337,1	318	297,1	285,7	274,2	-	269,5	-	264,7	-	-	-	-	260,9	224,7
CL2500		389	354	324	294	274	254	240	230	227	224	222	220	219	187	187	186	185	-

Table 7.		Material: WCB as per ASTM A216								
PN / CL	Standard	Temperature [°C]								
		-10…50	100	150	200	250	300	350	375	400
		Allowable working pressure [bar]								
PN10	EN 1092-1	10	10	9,7	9,4	9	8,3	7,9	7,7	6,7
PN16		16	16	15,6	15,1	14,4	13,4	12,8	12,4	10,8
CL150	PN-EN 1759-1	19,3	17,7	15,8	14	12,1	10,2	8,4	7,4	6,5
PN25	EN 1092-1	25	25	24,4	23,7	22,5	20,9	20	19,4	16,9
PN40		40	40	39,1	37,9	36	33,5	31,9	31,1	27
CL300	PN-EN 1759-1	50	46,4	45,1	43,9	41,8	38,9	36,9	36,6	34,6
PN63	EN 1092-1	63	63	61,5	59,6	56,8	52,7	50,3	49	42,5
PN100		100	100	97,7	94,7	90,1	83,6	79,8	77,8	67,5
CL600	PN-EN 1759-1	100,1	92,8	90,6	87,8	83,6	77,5	74	72,9	69,1
CL900		150,1	139,2	135,7	131,4	125,1	116,1	110,8	109,5	103,4
PN160		159,2	147,6	143,9	139,4	132,7	123,1	117,5	116,1	109,7
PN250		241,4	223,5	217,8	211,2	201,1	186,6	178,1	175,8	166,2
CL1500		250,5	231,9	226	219,2	208,7	193,6	184,8	182,4	172,5
PN320		313	289,9	282,6	273,9	260,8	242	231	227,9	215,6
PN400		396,4	367,3	358	346,9	330,3	306,6	292,6	288,6	273,1
CL2500		417,2	386,6	376,9	365,1	347,7	322,7	308	303,8	287,5

Table 6.	Material: G20Mn5 (1.6220) wg PN-EN 10213-3						
PN / CL	Norma	Temperature [°C]					
		-40	100	150	200	250	300
		Allowable working pressure [bar]					
PN10	-	6	6	3,8	3,6	3,48	3,4
PN16		16	16	10,1	9,6	9,28	9,07
PN25		25	25	15,8	15	14,5	14,2
PN40		40	28	28	27	26	25
PN63		63	59	58	55	53	51
PN100		100	95	92	87	85	82
PN160		160	152	148	140	136	132

Table 8.		Material: WC9 as per ASTM A217																		
PN / CL	Standard	Temperature [°C]																		
		-10…50	100	150	200	250	300	350	375	400	425	450	475	500	510	520	525	530	540	550
		Allowable working pressure [bar]																		
PN10	EN 1092-1	10	10	10	10	10	10	10	10	9,9	9,7	9,5	7,3	5,5	5	4,4	-	3,9	3,4	2,9
PN16		16	16	16	16	16	16	16	16	15,9	15,6	15,3	11,7	8,9	8	7,1	-	6,2	5,4	4,7
CL150	PN-EN 1759-1	19,5	17,7	15,8	14	12,1	10,2	8,4	7,4	6,5	5,6	4,6	3,7	2,8	-	-	1,9	-	1,3	-
PN25	EN 1092-1	25	25	25	25	25	25	25	25	24,8	24,4	23,9	18,3	14	12,6	11,2	-	9,8	8,5	7,4
PN40		40	40	40	40	40	40	40	40	39,7	39	38,3	29,2	22,3	20,2	18	-	15,7	13,6	12
CL300	PN-EN 1759-1	51,7	51,5	50,3	48,7	46,3	42,9	40,4	38,9	36,5	35,2	33,7	31,7	27,7	-	-	21,6	-	-	15,3
PN63	EN 1092-1	63	63	63	63	63	63	63	63	62,5	61,5	60,3	46	35,2	31,9	28,3	-	24,8	21,4	18,8
PN100		100	100	100	100	100	100	100	100	99,2	97,6	95,6	73,1	55,9	50,6	44,9	-	39,3	34	29,9
CL600	PN-EN 1759-1	103,4	103,1	100,3	97,5	92,7	85,7	80,4	77,6	73,3	70,2	67,7	63,4	55,7	-	-	43,3	-	-	30,7
CL900		155,1	154,6	150,6	146,2	139	128,6	120,7	116,5	109,8	105,4	101,4	95,1	83,4	-	-	64,9	-	-	46
PN160		164,5	163,9	159,5	154,7	147,4	136,4	128	123,6	116,5	111,8	107,6	100,8	87,3	-	-	68,9	-	-	48,8
PN250		249,2	248,1	239,8	231,2	222,6	206,6	193,8	187	176,4	169,2	162,9	152,5	122,2	-	-	104,4	-	-	74,1
CL1500		258,6	257,7	250,8	244	231,8	214,4	201,1	194,1	183,1	175,6	169,1	158,2	138,9	-	-	108,4	-	-	76,9
PN320		323,2	321,9	312,3	302,3	289,2	268	251,4	242,5	228,8	219,4	211,4	197,8	165,7	-	-	135,4	-	-	96
PN400		409,4	408	397,1	385,7	366,8	339,4	318,5	307,1	289,7	277,9	267,7	250,7	218,5	-	-	171,5	-	-	121,5
CL2500		430,9	429,5	418,3	406,5	386,2	357,2	335,3	323,2	304,9	292,5	281,8	263,9	231,7	-	-	180,5	-	-	127,9

Table 9.		Material: CF8M as per ASTM A351																						
PN / CL	Standard	Temperature [°C]																						
		-10…50	100	150	200	250	300	350	375	400	425	450	475	500	510	520	525	530	540	550	575	600	625	649
		Allowable working pressure [bar]																						
PN10	EN 1092-1	8,9	7,8	7,1	6,6	6,1	5,8	5,6	5,5	5,4	5,4	5,3	5,3	5,2	5,2	5,2	-	5,2	5,1	5,1	4,7	3,8	-	-
PN16		14,3	12,5	11,4	10,6	9,8	9,3	9	8,8	8,7	8,6	8,5	8,5	8,4	8,3	8,3	-	8,3	8,3	8,2	7,6	6,1	-	-
CL150	PN-EN 1759-1	18,4	16	14,8	13,6	12	10,2	8,4	7,4	6,5	5,6	4,6	3,7	2,8	-	-	1,9	-	1,4	-	-	-	-	-
PN25	EN 1092-1	22,3	19,5	17,8	16,5	15,5	14,6	14,1	13,8	13,6	13,5	13,4	13,3	13,2	13,1	13,1	-	13	13	12,9	12	9,6	-	-
PN40		35,6	31,3	28,5	26,4	24,7	23,4	22,6	22,1	21,8	21,6	21,4	21,2	21	21	20,9	-	20,8	20,8	20,7	19,1	15,5	-	-
CL300	PN-EN 1759-1	48,1	42,3	38,6	35,8	33,5	31,6	30,4	29,6	29,3	29	29	28,7	27,3	-	-	25,2	-	-	24	22,9	19,9	15,7	12,8
PN63	EN 1092-1	56,1	49,2	44,9	41,6	38,9	36,9	35,5	34,9	34,4	34	33,7	33,5	33,2	33	32,9	-	32,8	32,7	32,6	30,2	24,4	-	-
PN100		89,1	78,1	71,3	66	61,8	58,5	56,4	55,3	54,5	54	53,4	53,1	52,6	52,4	52,2	-	52,1	51,9	51,7	47,9	38,7	-	-
CL600	PN-EN 1759-1	96,3	84,5	77,1	71,2	66,7	63,1	61	59,8	58,9	58,3	57,7	57,3	54,8	-	-	50,6	-	-	47,8	45,5	39,8	31,7	25,5
CL900		144,4	126,8	115,6	107	100,2	95	91,3	89,7	88,2	87,3	86,6	86	82,1	-	-	75,9	-	-	71,8	68,3	59,7	47,5	38,3
PN160		153,1	134,4	122,6	113,5	106,3	100,7	96,8	95,1	93,6	92,6	91,8	91,2	87,1	-	-	80,5	-	-	76,2	72,5	63,3	50,4	40,3
PN250		231,9	203,3	185,4	171,9	160,9	152,4	146,7	143,9	141,7	140,3	139,1	138,1	131,7	-	-	121,8	-	-	115,4	109,8	95,9	76,3	61
CL1500		240,6	210,9	192,4	178,4	167	158,1	152,2	149,3	147,1	145,6	144,3	143,3	136,7	-	-	126,4	-	-	119,8	114	99,5	79,2	63,8
PN320		300,8	263,7	240,6	223	208,7	197,6	190,3	186,7	184	182,1	180,3	179,2	170,9	-	-	158	-	-	149,7	142,5	124,4	98,9	79,2
PN400		381	334,1	304,8	282,4	264,2	250,3	241,1	236,5	233,1	230,7	228,4	227	216,6	-	-	200,2	-	-	189,5	180,5	157,7	125,1	100,4
CL2500		401	351,7	320,8	297,2	278,1	263,5	253,8	249	245,4	242,9	240,4	238,9	228	-	-	210,7	-	-	199,5	190	166	131,7	106,5

DESIGNS

Design and material options have to be selected to suit working conditions. Contoured plug and press cage valve is the basic design for normal working conditions. In cases of noise emissions exceeding the level accepted by customer (normally 85 dBA) perforated valve plugs have to be applied, which are exchangeable with contoured plugs and allow noise reduction by 10 dBA with respect to the basic design. Further noise reduction (by 5 dBA) can be achieved by application of choke cage, which causes reduction in pressure drop between plug and seat. Such design is also recommended in case of choked flow, cavitation and flashing. Perforated structures feature higher pressure recovery coefficient F_L, which allows achievement of higher flow at the same Kvs and Δp as in basic design. In case of compressive media it is advisable to apply diffusers at the valve outlet. Design variant of valve has to be selected based on computer-aided calculations of flow ratio, noise level, medium status, and effectiveness of such actions depends on precision of data submitted by customer.

In justified cases (noise, choked flow) diffusers can be fitted with additional perforated choke structures in the form of assembled plates between flanges or welded in diffuser interior. On customer's request, also when flow conditions justify such solution, special executions are recommended concerning materials, flow ratios, control characteristics, leakage class, etc.

Table 10: Packing types with application ranges.

Packing	PN	Temperature [°C]		
		Bonnet		
		Standard	Extension	Bellow seal
PTFE-V PTFE + Graphite PTFE-V / TA-LUFT	up to CL600)*	-46...+200	-198...-46 +200...+300	-100...+200
Graphite Graphite / TA-LUFT	up to CL2500)*	+200...+300	+300...+537 ,(+650)**	+200...+400

)* PN10…40; CL150…300 – for below seal bonnet)** - for welding ends valves

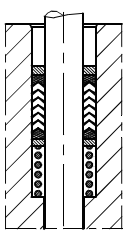

Packing (PTFE-V)

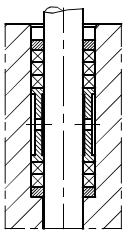

Packing (PTFE+GRAPHITE)

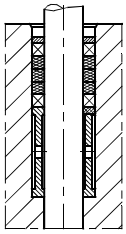

Packing (GRAPHITE)

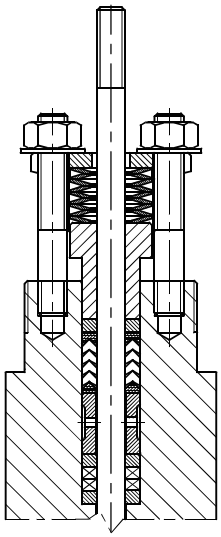

Packing kit TA-LUFT PTFE-V

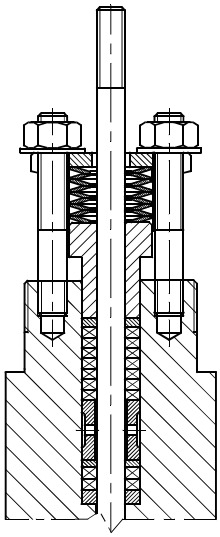

Packing kit TA-LUFT with graphite kit

Fig. 2. Bonnet packings

Table 11. Flow ratios Kvs.

Kvs					Stroke	Seat for. [D]	F_D		Nominal size DN										
Contoured plugs			Perforated plugs				Cl. IV	Cl. V											
L	P	S	L	P	[mm]	[mm]	[kN]		15	20	25	40	50	80	100	150	200	250	300
0,1	-	-	-	-	20	6,35	0,1	0,65											special execution, technical data according to individual inquiries
0,16	-	-	-	-															
0,25		-	-	-															
0,4		-	-	-															
0,63		-	-	-															
1,0		-	-	-															
1,6		-	-	-		9,52	0,15	1,0											
2,5		-	-	-		12,7	0,2	1,3											
4,0		4,8	-	-					•										
6,3		7,6				19,05	0,3	1,95		•									
10		12	6,3			20,64	0,33	2,1			•								
16		20	10			25,25	0,4	2,6											
25		30	16			31,72	0,5	3,3				•							
40		48	25			41,25	0,7	4,6					•						
63		-	40		38	50,8	0,8	5,2											
94		115	63			66,7	1,1	7,2						•					
125		-	125	94		88,9	1,4	9,1											
160		192													•				
250		-	180	125	50	107,92	1,7	11											
320		384	260	200		126,95	2,0	13											
500		600	425	320	63	158,72	2,5	16											
630		-	630	400		195	3,1	20											
800		960	720	500	80	203,2	3,2	21											

Calculation coefficients

Contoured plugs: F_L=0,9 ; X_T=0,72; Fd=0,46; xFz=0,65
Perforated plugs: F_L=0,95 ; X_T=0,78; Fd=0,1; xFz=0,75

NOTE
1. • - no executions for PN250…CL2500
2. Quick-opening valves (S) - only for maximum values of Kv for individual DN.

ALLOWABLE PRESSURE DROPS Δp.

Pressure drops Δp [bar] in tables 13 apply to closed valve and they are calculated taking into account the valve drive performance. Actual pressure drops should not exceed 70% of allowable working pressure for given nominal pressure, material execution and working temperature, as per tables 3…9.

$$\Delta p = \frac{Fs - F_D}{0{,}785 \cdot 10^{-4} \cdot D^2} \quad \text{or} \quad Fs = 0{,}785 \cdot 10^{-4} \cdot D^2 \cdot \Delta p + F_D$$

where
- Δp [bar] - calculated pressure drop
- Fs [kN] - actuator available force (table 12)
- F_D [kN] - valve plug to valve seat pressure (table 11)
- D [mm] - valve seat diameter (table 11)

Table 12: Available force Fs [kN] of pneumatic actuators

Actuator size	Direct actuator P ; P1			Reverse actuator R ; R1					
	Supply pressure [kPa]			Spring range [kPa]					
	140	250	400	20 - 100	40 - 120; 40 - 200	60 - 140	80 - 240	120 - 280	180 - 380
250	1,0	3,8	7,5	0,5	1,0	1,5	2,0	3,0	-
400	1,6	6,0	12,0	0,8	1,6	2,4	3,2	4,8	-
630	2,5	9,5	18,9	1,3	2,5	3,8	5,0	7,6	11,3
R-630T	-	-	-	2,6	5,0	7,6	10,0	15,2	22,6
1000	4,0	15,0	30,0	2,0	4,0	6,0	8,0	12,0	18,0
1500	6,0	22,5	45,0	3,0	6,0	9,0	12,0	18,0	27,0
1500T	12,0	45,0	90,0	6,0	12,0	18,0	24,0	36,0	54,0

NOTE:
1. For direct actuators P, P1 adopted spring range is 20 - 100 kPa.
2. For electric and other actuators Δp value can be calculated using above formula and figures from tables 11, taking nominal load capacity as available force Fs, as per actuator catalog chart

Table 13: Pressure drops Δp [bar] for valves with pneumatic actuators, leakage class IV and V

Valve seat diameter [mm]	Actuator size	Air-to-close Spring range 20…100 kPa						Air-to-open											
		IV class			V class			IV class						V class					
		Supply pressure [kPa]						Spring range [kPa]						Spring range [kPa]					
		140	250	400	140	250	400	20…100	40…120 40…200	60…140	80…240	120…280	180…380	20…100	40…120 40…200	60…140	80…240	120…280	180…380
		Δp [bar]																	
to 12,7	250	61	273	280	-	188	280	23	61	100	138	215	-	-	-	15	54	130	-
	400	107	280	-	23	280	-	47	110	173	236	280	-	-	22	85	148	274	-
19,05	250	24	118	240	-	62	190	7	24	41	58	93	-	-	-	-	-	36	
	400	45	196	280	-	14	280	17	45	72	100	155	-	-	-	15	43	98	
20,64	250	20	100	210	-	48	159	5	20	34	49	78	-	-	-	-	-	26	-
	400	37	166	280	-	115	280	14	37	60	84	131	-	-	-	9	32	79	-
	630	65	272	280	11	218	280	27	65	103	140	216	280	-	11	49	86	162	274
	R-630T	-	-	-	-	-	-	65	140	216	280	280	280	11	86	162	237	280	280
25,25	250	12	67	142	-	23	98	2	12	22	32	52	-	-	-	-	-	8	-
	400	24	112	232	-	68	188	8	24	40	56	88	-	-	-	-	12	44	-
	630	42	180	280	-	136	280	17	42	67	92	143	218	-	-	23	48	98	174
	R-630T	-	-	-	-	-	-	42	92	143	193	280	280	-	48	98	149	249	280
31,72	250	6	41	88	-	5	53	-	6	12	19	31	-	-	-	-	-	-	-
	400	14	70	145	-	34	110	4	14	24	34	54	-	-	-	-	-	19	-
	630	25	113	232	-	78	197	10	25	41	57	90	137	-	-	6	21	54	101
	R-630T	-	-	-	-	-	-	25	57	89	121	185	280	-	22	54	85	149	245
41,25	250	2	23	51	-	-	24	-	2	6	10	17	-	-	-	-	-	-	-
	400	7	40	84	-	12	57	1	7	13	19	31	-	-	-	-	-	3	-
	630	13	63	130	-	35	102	4	13	22	31	49	75	-	-	-	3	21	48
	R-630T	-	-	-	-	-	-	14	32	51	70	108	164	-	5	24	43	81	137
50,8	630	9	43	90	-	21	69	2,5	9	15	21	34	53	-	-	-	-	12	30
	1000	16	71	146	-	49	124	6	16	26	36	56	86	-	-	4	14	34	64
	1500	25	107	218	3	85	196	10	25	40	55	84	129	-	3	18	33	62	107
66,7	630	4	24	50	-	6	33	-	4	8	11	18	29	-	-	-	-	-	11
	1000	8	40	83	-	22	65	3	8	14	20	31	48	-	-	-	2	14	30
	1500	14	61	125	-	44	108	5	14	23	31	48	74	-	-	5	14	30	56
88,9	630	1,5	12	28	-	-	15	-	1	3	5	9	16	-	-	-	-	-	3
	1000	4	22	46	-	10	34	1	4	7	11	17	27	-	-	-	-	5	14
	1500	7	34	70	-	21	58	3	7	12	17	27	41	-	-	-	5	14	29
107,92	1000	3	14	30	-	4	20	-	3	5	7	11	18	-	-	-	-	1	8
	1500	5	23	47	-	13	37	1	5	8	11	18	28	-	-	-	1	8	17
	1500T	11	48	96	1	37	86	5	11	18	24	37	57	-	1	8	14	27	47
126,95	1000	1,5	10	22	-	1	13	-	1	3	4	7	12	-	-	-	-	-	3
	1500	3	16	34	-	8	25	-	3	6	8	13	20	-	-	-	-	4	11
	1500T	8	34	70	-	25	61	3	8	13	17	27	41	-	-	4	9	18	33
158,72	1000	0,5	6	13	-	-	6	-	-	1	2	4	7	-	-	-	-	-	-
	1500	2	10	21	-	3	14	-	2	3	5	8	12	-	-	-	-	1	6
	1500T	5	21	44	-	14	37	2	5	8	10	17	26	-	-	1	4	10	19
195	1500	-	7	14	-	-	8	-	1	2	3	5	8	-	-	-	-	-	2
	1500T	3	14	29	-	8	23	1	3	5	7	11	17	-	-	-	1	5	11
203,2	1500	-	6	13	-	-	7	-	-	2	3	4,5	7	-	-	-	-	-	2
	1500T	3	13	27	-	7	21	-	3	4,5	6	10	16	-	-	-	-	5	10

NOTE:

1. In table 13, theoretical acceptable pressure drops are included. Actual pressure drops with consideration of tolerance of spring manufacture and friction of internal parts of the actuator are lower than those given by 20%. Pressure drops chosen that way guarantee internal tightness of closing of the valves.
2. In valves working along the procedure: “increased control pressure – valve opens”, the actuator with springs ranged 40-120 kPa can be replaced with an actuator ranged 40-200 kPa, with the same pressure drops.
3. For reverse-working actuators (type R or R1), supply pressure should be higher than the upper spring range by at least 40 kPa.

NOISE REDUCTION:
If the noise due to cavitation or aerodynamic phenomena is exceeding the level acceptable by customer, it can be reduced by applying the following solutions:
- perforated valve plugs (Fig. 1 and table 11)
- silencer plates on valve outlet and/or inside of reduction joint (Fig. 3, 4 and table 14)
- reduction ends (diffusers) - (Fig.4).

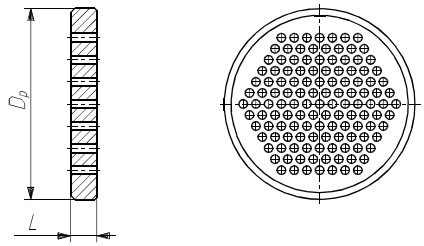

Fig. 3. Silence plate

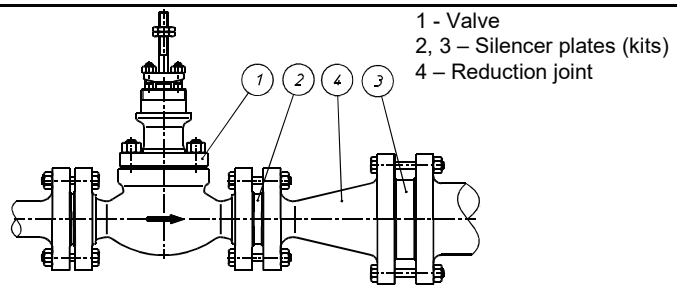

Fig. 4. Installation of silencer plates (or kits)

Table 14. Dimensions and flow ratios for silencer plates.

DN	15	20	25	40	50	80	100	150	200	250	300	350
Kvs	4	6,3	10	25	40	94	160	320	500	800	1000	1500
	3,6	5,7	9	22,5	36	84	144	288	450	720	900	1350
	3,2	5	8	20	32	75	128	256	400	640	800	1200
	2,8	4,4	7	17,5	28	66	112	224	350	560	700	1050
L [mm]	5			6		10		15		20		
Dp [mm]	45	58	68	88	102	138	162	218	285	345	410	465

Multi-plate silence kits are custom-built for requirements of individual processes.

DIMENSIONS AND WEIGHTS

Flanged conneciton valve

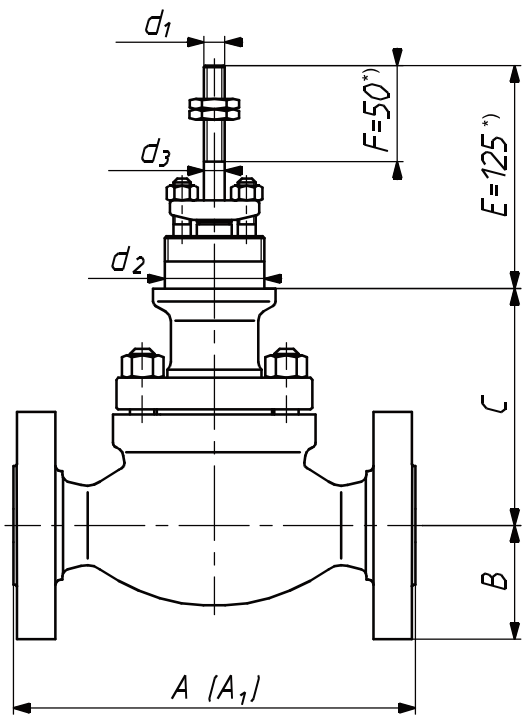

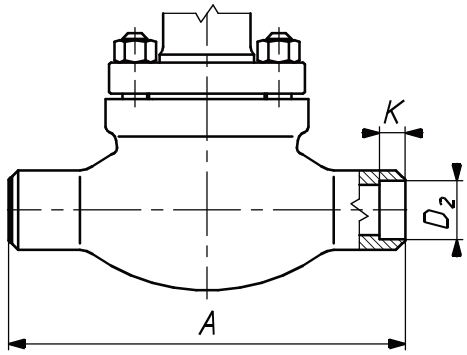

Valve with welding ends SW (DN15…50)

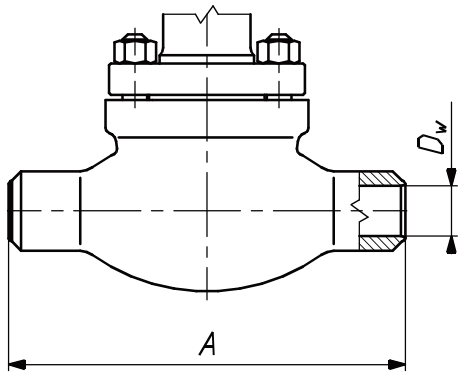

Valve with welding ends BW

Dimension E – valve plug location - valve closed
*) Connection with P/R-1000 actuator: E=195 mm and F=115 mm

Fig. 5. Valve connection dimensions

Table 15a: Control valves connection dimensions

DN		15…25						40						50					
PN/CL		PN10... CL300	PN63... CL600	CL900; PN160	PN250; CL1500	PN320	PN400; CL2500	PN10... CL300	PN63... CL600	CL900; PN160	PN250; CL1500	PN320	PN400; CL2500	PN10... CL300	PN63... CL600	CL900; PN160	PN250; CL1500	PN320	PN400; CL2500
B max		63	70	75		80	90	75	85	93		98	110	83	98	108		105	118
C	DS	135		149	193			145		172	214			155		175	237		
	DW	306		320	364			316		348	385			326		345	402		
	DM	254	-	-	-	-	-	254	-	-	-	-	-	270	-	-	-	-	-
Weight [kg]		8	8,5		9,5			15,5	17,5	19	20	22	23	22	25	28	31	33	34

DN		80						100						150		
PN/CL		PN10... CL300	PN63... CL600	CL900; PN160	PN250; CL1500	PN320	PN400; CL2500	PN10... CL300	PN63... CL600	CL900; PN160	PN250; CL1500	PN320	PN400; CL2500	PN10…CL300	PN63...CL600	CL900;PN160
B max		105	145	120	133	138	153	128	138	145	155	168	185	160	178	190
C	DS	206		233	257			217		252	329			287		365
	DW	375		402	447			407		442	498			426		483
	DM	405	-	-	-	-	-	405	-	-	-	-	-	470	-	-
Weight [kg]		40	43	44	50	51	52	65	72	75	86	89	95	132	147	156

DN		200		250		
PN/CL		PN10...CL300	PN63...CL600	PN10...CL300	PN10...CL300 (kv800)	PN63...CL600
B max		190	235	258		255
C	DS	439		458		
	DW	539		558		
	DM	580	-	580	660	-
Weight [kg]		195	220	320	330	360

DN300 - special execution, technical data according to Individual inquiries. (table: 15a and 15b).

NOTE: Weight of valve with standard bonnet and without actuator.

Table 15b: Control valves connection dimensions

DN	15…50	40…50	80...100	80; 100	100	150		200	200; 250			250	
Kvs [1)]	0,1…16	25…40		63; 94	125; 160	63…160	250; 320	94	125; 160	250; 320	500	630	800
Stroke	20			38			50	38		50	63		80
d_1	M12x1,25			M16x1,5			M20x1,5	M16x1,5		M20x1,5	M24x1,5		
d_2 [2)]	57,15 / 2 1/4”-16UN2A					84,15 / 3 5/16”-16NS2A		95,25 / 3 3/4”-12UN2A					
d_3	12		16			20		24					
Actuator	250 400 630 R-630T			630 1000 1500			1000 1500 1500T	1000 1500		1000 1500 1500T		1500 1500T	

NOTE:

[1)] Kvs value for contoured plugs L and P. For other plugs Kvs as per table 11 for same seat diameter.

[2)] For DN80 and DN100 valves with TA-LUFT packing d_2 = 84,15

Table 16. Control valve length, flanges.

DN	Dimension A [mm]										
	PN / DIN					CL					
	10; 16; 25; 40	63 - 100	160	250 - 320	400	CL150	CL300	CL600	CL900	CL1500	CL2500
15	130	230*	230*	260*	300*	184	190	203	236	273	308
20	150	230	230	260	300		194	206	241		
25	160						197	210	248		
40	200	260	260	300	350	222	235	251	270	311	359
50	230	300	300	350	400	254	267	286	311	340	400
80	310	380	380	450	500	298	317	336	387	460	498
100	350	430	430	520	580	352	368	394	464	530	575
150	480	550	550	**	**	451	473	508	556	**	**
200	600	650	**	**	**	543	568	610	**	**	**
250	730	775	**	**	**	673	708	752	**	**	**
300	special execution, technical data according to individual inquiries										
*CAUTION! For DN15 (as per PN) housing lengths were adopted as for DN20 (with exception of PN10; 16; 25; 40) ** higher nominal pressures available after agreement with the manufacturer											

NOTE: Dimensions "A" as listed in table 16 for CL150; CL300; Cl600; CL900; CL1500; CL2500 apply to bodies with B seat (RF). For other designs dimension A_1 can be calculated using ratios presented in table 17.

Table 17. Algorithms for calculation of control valve body length for valves with flanged end:

- with groove
- with recess
- with ring-joint

Body type and identification PN / ANSI	Pressure CL	DN	A_1
With groove DL / (GF) With recess F / (FF)	CL300	15…250	$A_1 = A + 5 \times 2$
	CL600 CL900 CL1500 CL2500		$A_1 = A - 1{,}5 \times 2$
With ring-joint J / (RTJ)	CL300	15	$A_1 = A + 5{,}5 \times 2$
		20…40	$A_1 = A + 6{,}5 \times 2$
	CL150	15…250	
	CL300	50…250	$A_1 = A + 8 \times 2$
	CL600 CL900 CL1500	15…40	$A_1 = A$
	CL2500	15…25	
	CL600	50…250	$A_1 = A + 1{,}5 \times 2$
	CL900 CL1500	50…100	
	CL900	150	
	CL2500	80	$A_1 = A + 3 \times 2$
		100	$A_1 = A + 4{,}5 \times 2$

Table 18: Control valve length, welding ends.

DN	Dimension A [mm] Nominal pressure		
	PN 10...CL600	CL900…PN160	PN250...CL2500
15; 20; 25	210	230	300
40	251	260	350
50	286	300	400
80	337	380	500
100	394	430	580
150	508	550	**
200	610	**	**
250	752	**	**
300	special execution, technical data according to individual inquiries		
** higher nominal pressures available after agreement with the manufacturer			

Table 19: Butt welding ends BW

DN	Dz [mm]	t [mm]	Dw [mm]	PN (DIN3239)									
				10	16	25	40	63	100	160	250	320	400
15	21,3	2	17,3 •	x	x	x	x	x	x	x			
		2,6	16,1 •								x		
		3,2	14,9 •									x	
		5	11,3 •										x
20	26,9	2,3	22,3	x	x	x	x	x	x				
25	33,7	2,6	28,5	x	x	x	x	x	x				
		2,9	27,9							x			
		3,6	26,5								x		
		5	23,7									x	
		7,1	19,5 •										x
	42,4		28,2										x
40	48,3	2,6	43,1	x	x	x	x						
		2,9	42,5					x	x				
		3,6	41,1							x			
		5	38,3								x		
		6,3	35,7									x	
		10	28,3										x
50	60,3	2,9	54,5	x	x	x	x	x					
		3,2	53,9						x				
		4	52,3							x			
		6,3	47,7								x		
		8	44,3									x	
		12,5	35,3										x
80	88,9	3,2	82,5	x	x	x	x						
		3,6	81,7 •					x					
		4	80,9 •						x				
		6,3	76,3							x			
		11	66,9								x		
		12,5	63,9									x	
		17,5	53,9 •										x
	114,3		79,3										x
100	114,3	3,6	107,1	x	x	x	x						
		4	106,3					x					
		5	104,3						x				
		8	98,3 •							x			
		14,2	85,9								x		
		16	82,3									x	
		22,2	69,9 •										x
	139,7	20	99,7										x
150	168,3	4,5	159,3	x	x	x	x						
		5,6	157,1 •					x					
		7,1	154,1 •						x				
		12,5	143,3 •							x			
	193,7		168,7							x			
200	219,1	5,9	207,3	x	x								
		6,3	206,5			x	x						
		7,1	204,9					x					
		10	199,1 •						x				
	244,5	12,5	219,5						x				
250	273	6,3	260,4	x	x								
		7,1	258,8			x	x						
		8,8	255,4					x					
		12,5	248						x				
300	special execution, technical data according to individual inquiries												

DN	Schedule	Dz [mm]	t [mm]	Dw [mm]	ANSI (ASME 36.10 M)					
					CL150	CL300	CL600	CL900	CL1500	CL2500
1/2”	40	21,3	2,8	15,7 •	x	x	x	x		
	80		3,7	13,9 •					x	
	160		4,8	11,7 •						x
3/4”	40	26,7	2,9	20,9	x	x	x	x		
	80		3,9	18,9 •					x	
	160		5,6	15,5 •						x
1”	40	33,4	3,4	26,6	x	x	x	x		
	80		4,5	24,4					x	
	160		6,4	20,6 •						x
	XXS		9,1	15,2 •						x
1 1/2”	40	48,3	3,7	40,9 •	x	x	x	x		
	80		5,1	38,1 •	x	x	x	x	x	
	160		7,1	34,1					x	
	XXS		10,2	27,9 •						x
2”	40	60,3	3,9	52,5	x	x	x	x		
	80		5,5	49,3 •				x		
	160		8,7	42,9					x	
	XXS		11,1	38,1 •						x
3”	40	88,9	5,5	77,9 •	x	x	x			
	80		7,6	73,7 •				x		
	160		11,1	66,7					x	
	XXS		15,2	58,5						x
4”	40	114,3	6	102,3	x	x	x			
	80		8,6	97,1 •				x		
	120		11,1	92,1 •					x	
	160		13,5	87,3 •					x	
	XXS		17,1	80,1 •						x
6”	40	168,3	7,1	154,1 •	x	x				
	80		11	146,3 •			x	x		
	120		14,3	139,7 •				x		
	160		18,3	131,7 •				x		
8”	20	219,1	6,4	206,3	x	x				
	30		7	205,1		x				
	40		8,2	202,7		x				
	60		10,3	198,5 •			x			
	80		12,7	193,7 •			x			
10”	20	273	6,4	260,2	x	x				
	30		7,8	257,4		x				
	40		9,3	254,4		x				
	60		12,7	247,6 •			x			
	80		15,1	242,8 •			x			
12”	special execution, technical data according to individual inquiries									

where:

D_Z [mm] - pipe external diameter,

D_W [mm] - pipe internal diameter,

t [mm] - pipe wall thickness.

NOTE:

•) - execution with reduction stubs as per fig. 7.

Table 18 contains series of example butt welding connections.

It is allowed to execute connections for other dimensions of pipes. Should pipe dimensions fall within the range ØB min / ØA max. (Fig. 6, table 20), connection can be executed as cast. Otherwise reduction stub has to be welded to body end, which shallresult inextension of housing by L or 2L size (Fig.7, table 20). Other connection dimensions are allowed upon consulting with manufacturer.

Table 20: Dimensions of non-processed butt welding ends (executed as cast) and lengths of reduction stubs.

DN	Pressure	A max	B min	L
15 ... 25	PN 10...40, CL 150, 300	38	20	50
	PN 63...100, CL 600	48	20	
	PN 160, CL 900	40	23	
	PN 250...400, CL 1500,2500	48	23	
40	PN 10...40, CL 150, 300	64	42	
	PN 63...100, CL 600	75	42	
	PN 160, CL 900	66	38	
	PN 250...400, CL 1500,2500	66	28	
50	PN 10...100, CL 150...600	80	55	
	PN 160, CL 900	80	50	
	PN 250...400, CL 1500,2500	92	42	
80	PN 10...40, CL 150, 300	110	82	75
	PN 63...100, CL 600	122	82	
	PN 160, CL 900	111	76	
	PN 250...400, CL 1500,2500	127	56	
100	PN 10...100, CL 150...600	144	102	
	PN 160, CL 900	144	102	
	PN 250...400, CL 1500,2500	165	81	
150	PN 10...40, CL 150, 300	183	160	100
	PN 63...100, CL 600	196	160	
	PN 160, CL 900	217	154	
200	PN 10...40, CL 150, 300	243	200	150
	PN 63...100, CL 600	248	200	
250	PN 10...40, CL 150, 300	291	248	
	PN 63...100, CL 600	346	248	

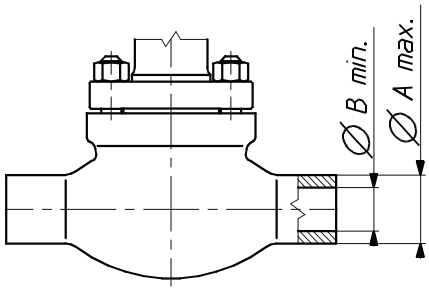

Fig. 6. Dimension of butt welding ends executed as cast

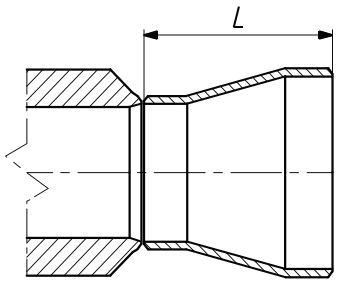

Fig. 7. Reduction stub

Table 21: SW socket welding ends

DN	D_2	K
15	21,7	9,7
20	27	13
25	34	
40	48,7	
50	61	16

VALVE ACTUATOR:

Pneumatic: - diaphragm multi-spring actuator as per table 22:

P1/R1 - cast yoke, no handwheel
P1B/R1B - cast yoke, side-mounted handwheel
P/R - column type, no handwheel
PN/RN - column type, top-mounted handwheel

NOTE: P - direct action; air-to-close
R - reverse action; air-to-open

Table 22: Pneumatic actuators

Type	Size	Diaphragm effective area [cm²]	Stroke [mm]	Revolutions per stroke
P/R ; PN/RN	250	250	20	5
P1/R1 ; P/R ; P1B/R1B ; PN/RN	400	400		
	630	630	20 ; 38	5 ; 9
	R-630T *)	2 x 630		
	1000	1000	38 ; 50 ; 63	8 ; 10 ; 13
P1/R1 ; P1B/R1B	1500	1500	38 ; 50 ; 63 ; 80; 100	8 ; 10 ; 13 ; 16; 20
	1500T	2 x 1500		
*) - there are no top mounted handweel for R-630T				

Table 23: Sizes and weights of pneumatic actuators P/R and PN/RN – Fig. 8.

Actuator size	D_1	D_2	H_1	H_2	Weight [kg]	
	mm				P/R	PN/RN
250	240	225	324	486	10	14,5
400	305		332	494	16	20,5
630	375	305	424	586	30	37
R-630T		-	638	-	45	-
1000	477	450	607	847	74	100
1500	550	-	704	-	95	-
1500T		-	1008	-	200	-

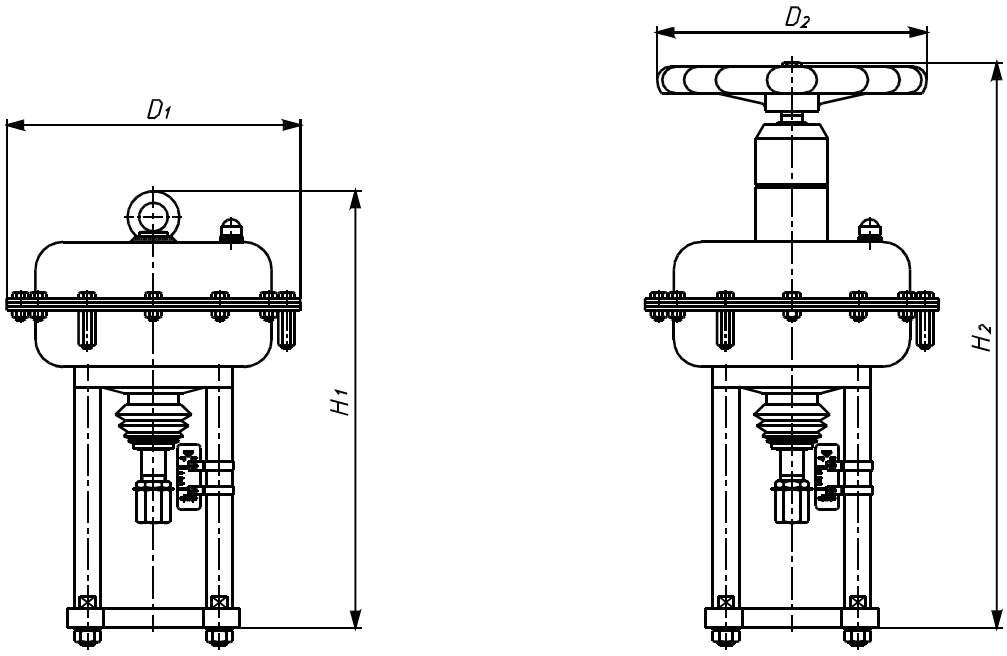

Fig. 8. Actuators P/R, PN/RN

Table 24: Sizes and weights of pneumatic actuators P1/R1 and P1B/R1B – Fig. 9.

Actuator size	B	D_1	D_2	H	Weight [kg]	
	mm				P1/R1	P1B/R1B
400	255	305	225	453	20	28
630	280	375	305	548	40	50
1000	340	477	450	773	85	105
1500	410	550		833	120	150
3000				1138	225	255

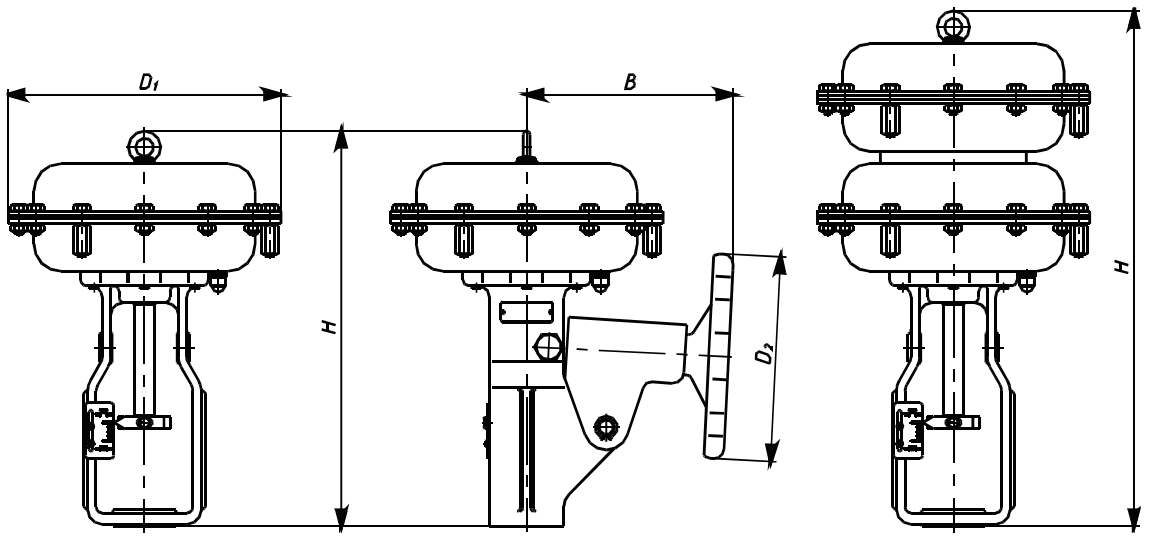

P1/R1, P1B/R1B - 400...1500

P1/R1-3000

Fig. 9. Actuators P1/R1, P1B/R1B

Control air connections:	1/4” NPT; NPT 1/2”; Rc 1/2”	
- tube diameters:	6x1; 8x1; 10x1; 12x1	
- spring ranges:	20...100 kPa; 40...120 kPa; 60...140 kPa	- 3 springs
	40...200 kPa; 80...240 kPa; 120...280 kPa	- 6 springs
	180...380 kPa*)	- 12 springs
	*)not applicable for actuators P/R; P1/R1-250; 400	
For actuator P1/R1-3000 (Tandem) -	for each range double the above numbers of springs.	
- maximum supply pressure:	actuator size 250...630 – 600 kPa	
	actuator size R-630T and 1000...1500 – 500 kPa	
- accessories (upon request):	handwheel, side-mounted handwheel (P1/R1) or top-mounted handwheel (P/R),	
	pneumatic positioner,	
	electro-pneumatic positioner,	
	smart electro-pneumatic positioner,	
	air set,	
	three-way solenoid valve,	
	lock-up valve,	
	position transducer,	
	limit switches.	

Electric: - electric drives; domestic and foreign electro-hydraulicdrives (for details and technical specification refer to manufacturers’ catalogs)

Manual: - manual drive type 20, fig. 10 table 25.

Table 25: Handwheels series 20 – types, sizes and weights.

Type	Stroke [mm]	d_1	d_2	H	D	rev./stroke	Weight [kg]
20-20-57-M12	20	M12x1,25	57,15	265	228	8	7,5
20-20-84-M12			84,15				
20-38-57-M16	38	M16x1,5	57,15		298	15	10
20-38-84-M16			84,15				
20-38-95-M16			95,25				
20-50-84-M20	50	M20x1,5	84,15	385	457	16	16
20-50-95-M20			95,25				
20-63-95-M24	63	M24x1,5				20	
20-80-95-M24	80			533	610	19	24

Marking:
Example: 20-38-57-M16 – manual drive type 20; stroke - 38mm; d_2 = 57,15 mm; d_1 = M16x1,5

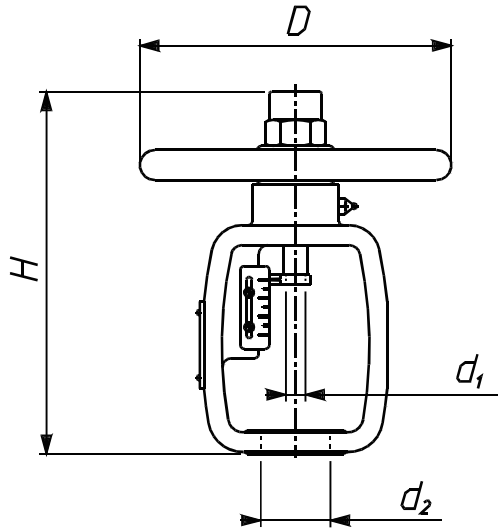

Fig. 10. Manual drive type 20.

SPECIAL OPTIONS:

- oxygen and hydrogen option:
Application of adequate materials, mechanical and chemical cleaning, inspections and assembly ensure compatibility with oxygen and hydrogen flows.

- low temperature fluid option:
Application of adequate materials and special bonnet design ensures reliable isolation of valve drive from the Impact of low temperatures. Used mostly for liquid oxygen and liquid nitrogen.

- acid gas option:
Parts of valve can be made of materials and under conditions to enable valve operation with gases of H_2S content as per NACE MR-0175.

- heat jacket option:
Design and technical parameters as per customer's specification.

- tight valve-seat option:
When class VI tightness is required (up to $\Delta p \leqslant 35$ bar)

– valves with non-cast bodies:
If a special construction of the valve body is needed, it is possible to design a valve for individual customer's needs (angle valves – type L and Z).

CLASSIFICATION AND MARKING:

	-	Z1A	-				7			

Type and action:

- pneumatic with direct action:	**P; P1**
- pneumatic with reverse action:	**R; R1**
- pneumatic withside-mounted handwheel:	**P1B; R1B**
- pneumatic with top-mounted handwheel:	**PN; RN**
- electric:	**E**
- manual:	**20**

Bonnet:

- standard:	**1**
- extension:	**2**
- bellow seal:	**3**
- other:	**X**

Packing:

- PTFE, braided	**A**
- PTFE, V type	**B**
- PTFE, for oxygen	**C**
- graphite, braided	**D**
- graphite, expanded	**E**
- TA-Luft, PTFE	**F**
- TA-Luft, graphite	**G**

Leakage class:

- basic: class IV	**4**
- enhanced: class V	**5**
- tight (special) class VI	**6**

Valve plug:

- unbalanced	**7**

Choke cages:

- no choke cages	**0**
- one choke cage	**1**

Plug characteristics and type:

- linear, contoured	**L**
- equal percentage	**P**
- quick-opening,(on-off)	**S**
- linear, perforated	**T**
- equal percentage, perforated	**V**
- other	**X**

Body material:

- carbon steel	**3**
- alloy steel	**4**
- stainless steel	**5**
- other	**X**

MARKING EXAMPLE:

Control valve type Z1A with reverse action pneumatic actuator with a top-mounted handwheel, extension bonnet, expanded graphite stem packing, leakage class IV, choke cage, equal percentage contoured plug, execution in alloy steel:

RN-Z1A-2E471P4

Marking is shown on valve nameplate.

Additionaly, it shows:
- nominal size [DN],
- nominal pressure [PN],
- max working temperature [TS],
- max working pressure [PS],
- test pressure [PT],
- flow ratio [Kvs],
- plug stroke [H],
- plug stroke fluid group [1 or 2],
- serial number and year of manufacture.

ORDERING:

The order should contain all information as per data questionnaire. Full information can be obtained from the Sales and Marketing Department or Technical and Development Department.